POSITION

Subject: FEBEG comments on FPS consultation on the parameters by which the amount of capacity purchased under the capacity mechanism is determined.
Date: 27 March 2020

Contact: Jean-François Waignier
Phone: +32 485 779 202
Mail: Jean-francois.waignier@febeg.be

Please find hereafter the comments of FEBEG on FPS's public consultation on the parameters by which the amount of capacity purchased under the capacity mechanism is determined[1].

Proposal of FPS is very welcome

FEBEG is worried about the approach and the methodology put forward by the CREG in the different documents regarding the parameters for determining the amount of capacity purchased under the capacity mechanism – we refer to FEBEG's contribution to the latest consultation attached in annex 1 for more details.

FEBEG is very concerned that the CREG proposals are too theoretical and not sufficiently tested with and justified to the stakeholders and will not guarantee the Security of Supply

FEBEG therefore welcomes the document "*Capacity remuneration mechanism: parameters by which the quantity under the capacity mechanism purchased is determined*" submitted to consultation and considers that FPS Economy has the necessary powers and rights to draft such document.

This proposal ensures that the desired level of adequacy is achieved which is the main goal of the CRM and the most important challenge in the coming years for the Belgian electricity market.
FEBEG therefore fully supports the general approach of the new proposal.

Some positive elements are:

- **Art.4 §4**: events outside of BE can be included in the sensitivities added to the reference scenario, this is essential to ensure that sufficient capacity will be available in the country
- **Art.10 §6**: revenue estimates are based on the median revenues, which corresponds to the reality of a market operator (we also refer to the FEBEG presentation in annex 2)
- **Art.11 §2**, second step: addition of required balancing capacity to the demand curve, in order to ensure stability of the grid at peak demand.
- **Art.11 §5**: capacity reserved for T-1 is based on the 200hours required to cover the peak of the load duration curve, which I sin line with the objective of the CRM law.

However, some elements need clarification or further improvement. We hereafter provide our comments on these.

1

https://economie.fgov.be/nl/themas/energie/bevoorradingszekerheid/capaciteitsremuneratiemechanis
https://economie.fgov.be/fr/themes/energie/securite-dapprovisionnement/mecanisme-de-remuneration-de

Main points for clarification/enhancements

Regarding FACTOR X

The FACTOR X appears to play a role in the determination of the point A, both on the X-axis as the Y-axis. An illustration of our understanding of the demand curve and the interpretation of the FACTOR X can be found in the figure (1) below.

The proposal states that "Le prix maximum est déterminé comme le produit du coût net d'un nouvel entrant multiplié par un facteur de correction, noté X" It is indeed normal practice to take into account uncertainty around the estimation of NetCONE, and thus this principle of uncertainty is not questioned as such, we do however have other questions and remarks related to the Factor X. Notably with regards to the Volume, corresponding with point A.

The FACTOR X should be higher than 1, when it is applied to the NetCONE, also, in this case, we wonder why correction factor X is not predefined in the Royal Decree, as in other Member states the factor is embedded in the legal framework as this provides certainty for market players. Additionally, how the Factor X is applied to the volume is not clear, we refer to Art.11 §2 1° and our comments below.

Art.11 §2, 1 – This article mentions that the Factor X is used to determine this volume, but it remains unclear how this is done: "Pour le volume maximum au prix maximum, elle est déterminée sur la base de la simulation visée à l'article 12 et du scénario de référence visé à l'article 4, § 7, mais pour lequel il est tenu compte du niveau de sécurité d'approvisionnement visé à l'article 7undecies, §3 de la loi du 29 avril 1999, adapté par le facteur de correction X, visé à l'article 5".

- Do we correctly understand that the same factor X is applied to the CONE and to the Target Volume? Does the figure below (1) correctly illustrate this principle?
- What is the reasoning behind applying the same factor to both cost and capacity? We are not aware of any study and this is to our knowledge not common practice.
- We advocate to have a different factor X for capacity and NetCONE, based on a well-defined methodology and sound arguments, since LOLE x VOLL = CONE. So LOLE and CONE evolve proportionally, but this is not the case for volume and CONE. Probably this relationship is not linear

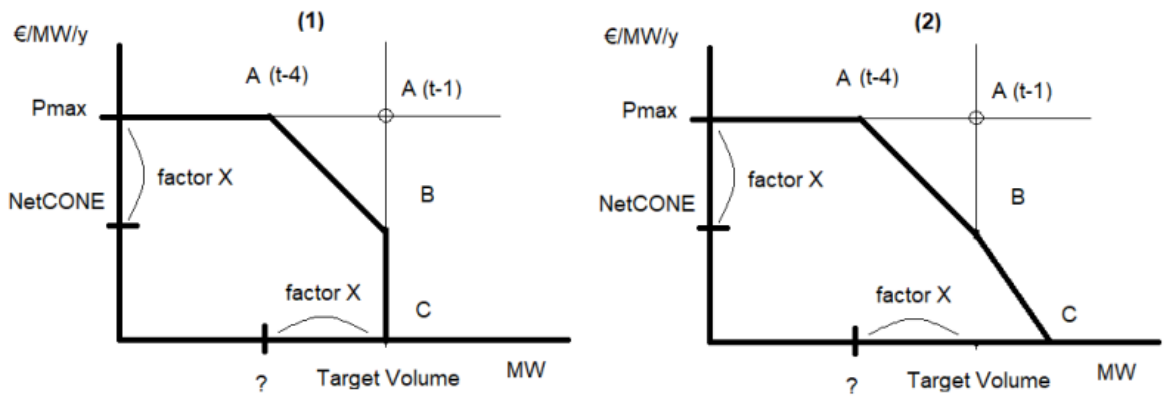

Figure 1 & 2

Regarding the "ABC" approach for the demand curve

Art.9: We fully support the "ABC" approach for the demand curve. This is aligned with European practice and provides clear visibility to all market parties. Obviously, the determination of each point individually is of importance. Based on European experiences we believe it is useful to consider a slope in the curve between B & C. This allows to add some price elasticity in the auction for the benefits of customers. Figure (2) illustrates this principle, which is applied in other CRM's in the EU (Italy and UK for example) and has several advantages:

- We refer to the UK example, where the EU Commission Decision of 24.10.2019 (SA.35980 – 2019/C) states that "The sloping demand curve allows a trade-off to be made between reliability and cost, so that less capacity is procured in a given year if the price is very high. It also helps to mitigate gaming risks because it provides an auction price cap, and flexibility to procure less capacity if the price is high – both of which reduce opportunities for participants to push up prices by exercising market power."
- In Italy, for example, the point which corresponds to a price of zero €/MW/y (point C in figure (2)) corresponds to a LOLE of almost zero, which enables the CRM to provide very high adequacy at a low cost (source: State Aid SA.42011 (2017/N) – figure 4, section 2.5[2])

These examples illustrate the advantages of a sloped curve: [1] accounting for uncertainty of the cost to supply reliable capacity (lower costs justify procurement of more capacity, with a higher reliability as a result), [2] mitigating market power abuse (slightly less capacity supplied strongly increases capacity prices) and [3] limiting variability of the capacity price (small changes of the demand/supply cause large price variations with a vertical demand curve).

We understand that the current proposal aims at avoiding to procure capacity above a certain level (in order to mitigate the total cost), but we believe that this should not prevent to have a sound approach.

It is indeed possible to reach this important objective, not to over-procure, and still enjoy the many advantages of a sloped curve. For instance, the point C (Figure (2)) could correspond to a value between the target T-4 volume and the sum of this target volume and the target T-1 volume.
Depending on the actual outcome of the T-4 auction, the target T-1 volume (of the adjustment auction in T-1) could then be adapted so as to avoid over-procurement.

Regarding the T-1 auction, one should not forget that the underlying resource adequacy assessments are providing estimates and that some uncertainties exist around the values provided. The authorities will have to take into account this uncertainty and the need for a sloped demand curve when setting up the target value for the T-1 auction (B) and the maximum capacity to be procured (C).

Regarding foreign capacity

Art.11 §2.5, second sentence seems to imply a reduction of demand in the auction with the maximum foreign volume that can participate per border. The design as presented up to now has the foreign capacity participating directly to the main auction. Therefore, such a reduction is redundant. If, however, this refers to a similar treatment of foreign and national capacity in T-1 and T-4 with regards to the "200 h" rules, than this should be clarified. At the moment, it is not clear how this should be interpreted.

[2] https://ec.europa.eu/competition/state_aid/cases/270875/270875_1979508_218_2.pdf

Regarding the balancing revenues

Art.10 §3 & §7: The inclusion of the net balancing market revenues is still questioned by FEBEG as these revenues are not guaranteed at all time for every market participant and/or technology. Nevertheless we provide here after some comments on the proposed calculation:

- Reference calculation period of 36 months seems long, given how dynamic the market has become.
- A separate calculation of the net balancing market revenues should be done for each of the technologies considered. The capabilities – and thus potential revenues – of each technology on the balancing markets (FCR, aFRR, mFRR) is different and this should be reflected. E.g. CCGTs and OCGTs generally do not derive any revenues from the FCR market, while batteries generally do not derive revenues from the mFRR market. Also, the revenues can be different from one asset to the other.
- **Art 10 §7 2°**: how will the must-run costs be determined ?
- **Art10 §7 3°** should also be clarified: in the proposal, we understand that the opportunity cost are subtracted, but the opportunity cost should be equal to the inframarginal rent captured in the short term energy markets calculated before. An equation to illustrate the definition of the net CONE would be helpful. In particular, does the subtraction of the opportunity costs imply that the inframarginal rents (= opportunity costs of supplying ancillary services) are not taken into account in the net CONE (we subtract and we add them again) ?
- If we subtract balancing market revenues from the Gross CONE, we assume that the new entrant per captures these revenues. Is that a reasonable assumption ?

Regarding the calibration of the intermediate price cap

The **Art.17 and 18** describe the methodology for the calibration of the intermediate price cap for a one-year contract. Notwithstanding the debate on the appropriateness of such intermediate price caps, FEBEG would like to reiterate its concerns with regard to the proposed methodology for the calibration of the intermediate price cap for the one-year contracts:

- ***Definition of 'eligible costs' doesn't match day-to-day practices:***
  In reality, it will be a very difficult exercise to split investment costs between a cost related to a 'major overhaul', a cost related to a 'lifetime extension' and a cost related to a 'capacity increase' let alone to make the distinction between a 'recurrent' and a 'non-recurrent' investment cost. In order to avoid too complex and detailed rules as well as ample discussions on interpretation issues, **all 'capitalized investments' should be considered as eligible investment costs**. This is a simple criterion that allows for an easy and objective verification in the accounts.

- ***Inconsistency with threshold for a 3-year contract:***
  The CREG proposal for investment thresholds sets the investment threshold for a 3-year contract at a very high level. Taking into account the proposed definition of eligible costs, all initial and non-recurrent investment costs below the threshold for a 3-year contract would not be able to benefit from a longer contract duration. As part of the investment cost in a lifetime extension or refurbishment will be considered – according to the proposed definition of eligible costs – as a recurrent investment cost and is thus considered as non-eligible, most investments in lifetime extension or refurbishment of existing power plants will not be able to benefit from a 3-year contract. As non-recurrent investment costs below the threshold for a 3-year contract cannot benefit from a longer contract duration, the only way to recover those investment costs is through winning one or several 1-year contracts in the capacity auctions.

Unfortunately, the intermediate price cap doesn't leave room for existing power plants with non-recurrent investment costs below the threshold for a 3-year contract to bid in their missing money. Depending on the calibration of the intermediate price cap some existing power plants even risk not to be able to recover the costs of a major overhaul through their bid for a one year contract. As a result, **the design of the capacity remuneration mechanism prevents existing power plants to bid in their missing money**.

Such an approach:

- is in breach with the principles of non-discrimination and technology-neutrality as the capacity remuneration mechanism should be market-wide allowing new and existing capacities to compete on level playing field;
- increases costs for society as relatively moderate investments in lifetime extension or refurbishment of existing power plants are excluded.

The proposals for investment thresholds and the proposals for the calibration of the intermediate price cap should be made coherent and consistent to avoid that investment costs below the investment threshold for a 3-year contract are excluded from participation to the Belgian capacity remuneration mechanism.

For more details and background on the definition of eligible costs as well as on the inconsistence between the threshold for a 3-year contract and the intermediate price cap, FEBEG refers to the note in attachment (annex 3: FEBEG Note - CRM design provides exit signal for existing power plants).

Regarding the other parameters mentioned in the Royal Decree

We would like to put forward the following comments:

- **Art.25**: We recommend to consider the approach used in other reliability options for the definition of the strike price. In our view the approach could be more pragmatic as in other CRM mechanisms. However, for potential investor the key element is that the strike price is defined as soon as possible in a transparent manner allowing all market parties to prepare their bid.
- **Art.24** & in addition of the earlier comments on Art 25.: The proposal would introduce multiple strike prices, which will hamper the competition in the CRM, impact the functioning of energy markets and create distortion between market participants (as mentioned in previous position papers). As requested during the CRM taskforce FEBEG wants to repeat that only one single strike price should be applied. By allowing demand side management to have the max(Strike price, DMP) implicit multiple strike prices are created. If not, FEBEG requests to have the same approach for other capacities, resulting in Max(Strike price, SRMC (Gas price * efficiency + CO2 price * carbon intensity)) for gas power-stations.

Additional comments per article.

Art.4 §6: A clear date by which Elia is supposed to submit the consultation report and the CREG is supposed to submit their proposal is lacking.

Art.5 & 6: We would welcome some clarification on the process –in particular regarding the timings– and roles and responsibilities of the different parties. These clarifications are necessary to ensure swift and solid procedures to timely deliver the required outputs. An illustration: the intermediate values will be fixed by the Minister on the 30th of June at the latest based on the proposal of the Commission: as the Minister has the right to deviate from this proposal, the proposal should be submitted to the Minister in due time – to allow a thorough evaluation – and not on the 29th of June.

Art.5 §1: The gross CONE is a key parameter in the design of the demand curve. The document does not discuss the cost of capital (WACC) associated with the CONE. For investors this is an important criterion, this element need to be clarified at some point.
What is meant with "in cooperation with"? does this mean that the commission makes a proposal of the intermediate parameters, on the basis of a proposal of Elia and thus that Elia makes an initial proposal. We assume this is the case as the commission in the end (Art5 §3) makes the proposal to the minister. It should be clarified that Elia makes the initial proposal (for example: "on the basis of a proposal from Elia, the commission prepares a proposal for the following intermediate parameter")

Art.5 §2: In this article it should be clearly mentioned when the public consultation should be organized, furthermore we would like to recommend to include, such as it is the case in Art.6 §1, to include that the public consultation should be held "during a period of at least one month".

Art.5 §3: In this article it is not mentioned when the commission must submit it proposal, it should be clearly mentioned by when this is required. Secondly it should be mentioned to which period the intermediate parameters do apply, for example. "The intermediate parameter, which are applicable this year/next year, are at the latest fixed on June 30th of every year"

Art.6 §1: The timing should be clarified (eg: "the grid operator organizes every year at the latest by XX/YY, one or more public consultations").

Art.6 §3: The timing should be clarified (eg: "the grid operator submits it consultation report, at the latest by XX/YY)

Art.7 §2 1°: We are happy to see that it is clarified that the volumes linked to the 200 hours are based on load duration curve as FEBEG understood from the parliamentary work and contrary to the approach put forward by the CREG.

Art.7 §2 3°: It is not only about the maximum import capacity available, but mainly about the expected foreign capacity that is available and that could effectively contribute to SOS in Belgium. This is linked to the concept of "maximum entry capacity" / "interconnector derating" and this element should therefore be mentioned explicitly.

Art.7 §2 4°: The computation of infra marginal rent should be realized for both "best performer" (e.g. brand new asset) and "worst performer" (e.g. 20 years old+ asset)

Art.10: Strictly speaking, the reference to / definition of "missing money" is misleading. The net CONE is equal to the gross CONE minus the expected infra-marginal revenues and the expected revenues from ancillary services. Also, it is not clear why margins from ancillary services are subtracted from the Gross CONE.

Art.10 §2: We think that Art 10 §2 might not be in line with the electricity market regulation and the (proposed) ENTSO-E methodology being referred in Art 10 §4. Indeed the electricity market regulation foresees that one single CONE value will be made available based on a methodology proposed by ENTSO-E. The underlying methodology will explain how to get this value… Concretely, the (proposed) ENTSO-E methodology already defines a single CONE value based on several candidate technologies. So Art 10 §2 should probably be removed as it is redundant with the methodology that shall be defined at European level.

Art.10 §4: To clarify this issue, and avoid any possible confusion, the computation of infra marginal rent should be realized for both "best performer" (e.g. brand new asset) and "worst performer" (e.g. 20 years old+ asset)

Art.10 §6: FEBEG welcomes that the FPS is supporting FEBEG's position that the incomes out of the electricity only market (EOM) should be based on the median and not on the average.

Art.10 §6 2: Reference is made to Art.6 §2 5°. We think this should be Art.6 §2 4°.

Art.10 §4: Consistency should be ensured between the definition of the CONE and eligible costs for multiyear contracts

Art.17 §2 3°: The personnel cost seems to be considered as part of the Short Run Marginal Costs which is not the case. The Personnel cost is part of the yearly fixed Operational and Maintenance costs as defined in article Art.17 §2 2° and thus be taken into account in this cost component.

Art.19 §2 3°: The terminology P50 is used here while in Art.10 §6 the terminology median is used. FEBEG would like to propose to use the same terminology or to mention both Median (P50).

Art.20 §1: Life-time extension cost should be included. Cfr comments on Art.17 and 18.

Art.21 §5: FEBEG would like to emphasize that an exemption should be foreseen on the volume that is exposed to the payback obligation, cfr fixed percentage, earlier position paper.

Annex 1:

FEBEG comments on CREG consultation on the proposition regarding the parameters allowing to determine the quantity of capacity bought in the framework of capacity market

POSITION

Subject:	FEBEG comments on CREG consultation on the proposition regarding the parameters allowing to determine the quantity of capacity bought in the framework of capacity market
Date:	20 March 2020

Contact:	Jean-François Waignier
Phone:	+32 485 779 202
Mail:	Jean-francois.waignier@febeg.be

Please find hereafter the comments of FEBEG on CREG's public consultation on the parameters for determining the amount of capacity purchased under the capacity mechanism[1].

As preliminary remark, FEBEG deplores the very short timeframe (1 week) which has been granted for providing comments on such an important design element for the upcoming CRM, especially in the present period of COVID-19 which complicates the day-to-day work.
FEBEG considers that one week remains short.

Proposal of CREG is not sufficiently tested with and justified towards stakeholders

CREG has previously already consulted a large part of the present draft during the consultation of the draft note (Z)2024 published on 21 November 2020.
This previous consultation was open from for only 2 weeks (between the 21st of November till the 6th of December) while the current consultation on the complemented note is only open for one week.
This approach of CREG of consecutive short consultations doesn't ensure a proper involvement of stakeholders on one of the key methodologies that will have to ensure the security of supply of the country.

Despite the short timing, FEBEG has provided an extensive response to the previous CREG consultation on its draft note (Z)2024 in the document "FEBEG's Comments on CREG's proposed methodology for the volume determination" of 06/12/2019 which is attached in annex. The main conclusion of FEBEG answer was the following:

> In conclusion FEBEG believes the current CREG proposal should be fundamentally reviewed to take into additional considerations but also alternative costs or benefits of the different arguments.

FEBEG is very surprised and concerned by the fact that its comments made in the frame of the consultation of the draft note (Z)2024 have not been considered at all by the CREG.

FEBEG particularly deplores that all its comments have been dismissed with little justification from the CREG. FEBEG will hereafter repeat the main concerns it has with the proposal contained in the present document even if it was already provided during the public consultation organized by the CREG on its draft note (Z)2024 in the section 'Comments on Chapter 6'

1

https://www.creg.be/fr/consultations-publiques/consultation-publique-concernant-le-projet-de-proposition-relative-aux
https://www.creg.be/nl/openbare-raadplegingen/openbare-raadpleging-betreffende-het-ontwerpvoorstel-over-de-parameters

For the abovementioned reasons, **FEBEG is very concerned that the CREG proposals are too theoretical and not sufficiently tested with and justified to the stakeholders,** we also refer – in this context – to the extensive reaction of ELIA to this first consultation especially considering that ELIA has already a longstanding experience – and is even frontrunner – in performing adequacy assessments and determination of volumes (e.g. for the strategic reserves).

Comments on Chapter 3: "Consultation"

Pro-forma §33 mentions a consultation period of 3 weeks while it is of only one week.

Comments on Chapter 4: "Context"

Chapter 4 provides the context in which a CRM can be implemented as well as the high-level description of the steps to be followed in the frame of the CRM.

In paragraph 47 of the note, the CREG states that it derives from the Electricity Regulation that the national regulatory authority m must determine the parameters for the volume to contract and that it can propose the methodologies for determining these parameters. **According to FEBEG this interpretation of CREG is not correct**: Article 25(4) of the Electricity Regulation states that "When applying capacity mechanisms, the parameters determining the amount of capacity procured in the capacity mechanism shall be approved <u>by the Member State or by a competent authority designated by the Member State</u>, on the basis of a proposal of the regulatory authority" (we underline).
FEBEG would like to specify that, whereas **Article 25(4) of the Electricity Regulation provides the regulatory authority the competence to propose the parameters, the final decision on these parameters rests with the Member State, as stated in this Article. This Article furthermore includes no delegation towards the regulator to propose methodologies**.

For the rest FEBEG has no particular comments on this chapter which is meanly descriptive.

We nevertheless wish to mention the following elements:

- **Different studies[2] have demonstrated that there is an adequacy issue in Belgium**. The most recent being Elia's "Adequacy and flexibility study for Belgium 2020 – 2030" and the "ENTSO-E Mid-term Adequacy Forecast (MAF)" report. It should be noted that before the auction an additional regional adequacy made by the Pentalateral Energy Forum (PLEF) is expected.
- While it is true that the past adequacy studies are not yet based on the European methodology –as these were not yet defined– these take into account as much as possible elements that are expected to be mandated by the European methodologies. **These studies are therefore valid and should duly be considered**.
- **Belgium has submitted an implementation plan** in line with art. 20 of Regulation (EU) 2019/943 in which the Belgian state concludes that a CRM is required.

2

- Albrecht, Johan, Hamels, S., & Thomas, L. (2017). Le trilemme énergétique: une exploration du paysage Belge de l'electricité en l'An 2030. Gent: Skribis., https://biblio.ugent.be/publication/8560302
- Study by Energyville: https://www.energyville.be/sites/energyville/files/downloads/2018/gp_bbl_iew_report_-_v2018_03_06_final.pdf
- Study by the Federal Planning Bureau: https://www.plan.be/admin/uploaded/201802260841090.OPREP201802.pdf

Comments on Chapter 5: "Methodology for determining the volume required and determining the basic data."

Regarding the need for a CRM.

Concerning the existing studies

FEBEG supports the recent study of Elia on the adequacy requirement for the period 2020-2030[3] concluding that Belgium faces a structural problem of security of supply for the coming decade, even if all existing capacity remains on the market. FEBEG also shares the conclusion of Elia that there exists an urgent need to rapidly trigger the necessary investments in capacity to deal with the upcoming supply-side shock to the Belgian electricity system in the coming years.
As mentioned above this also has been confirmed by the latest ENTSO-E Mid-term Adequacy Forecast (MAF) which concludes that for 2025, 2.5 GW of new capacity (in addition to Demand Side Management, storage and renewables) is needed to meet the reliability criterion. Furthermore, the report mentions that 'as demonstrated in [various] studies, there is no guarantee that such investments in new capacity will materialize in the future without a market-wide CRM mechanism'.[4]

While the legal framework of the latest adequacy study of the Belgian TSO (ELIA) is the Belgian Electricity Law and not the Clean Energy Package (CEP), the latter has, to the maximum extent possible, been integrated in the assessment (a.o. a probabilistic approach, flow-based domain simulation for the commercial exchanges, minRAM 70% rule and the integration of an economic viability test for new and existing capacity). This observation was also made by FPS Economy in a note published in October 2019[5] which addresses the concerns raised by the CREG on ELIA's adequacy study.

The process for the definition of the adequacy study by the Belgian TSO (ELIA) has largely involved the different Belgian stakeholders. Therefore, FEBEG supports the methodology and parameters used for the study and endorses its conclusions. On the other hand, **FEBEG does not agree with the statement of CREG that it is necessary to proceed to a new evaluation of the need for a capacity market in Belgium**. This would not only delay the process and related timing for its implementation in Belgium according to the CRM law approved on the 22 April 2019 but is not required as **sufficient studies have demonstrated an adequacy concern[6].**

On paragraph 53, FEBEG agrees that future adequacy studies for Belgium should be based on a European methodology for the adequacy assessment (as being currently elaborated by ENTSO-E). FEBEG considers that this study should be complemented with regional and national analysis on certain parameters in order to consider different scenarios/sensitivities or risk factors specific to a country and/or a region.

Belgium has indeed the particularity that it is especially interconnected with neighboring countries. Considering that it is very difficult to predict to which extent the neighboring countries' energy policies (eg. the market reforms in these countries as well as their options to contribute to the decarbonization targets) could hamper Belgian's electricity import capacities and since any adequacy issue will have an important consequence for the economy, the system operator and the authorities should treat the security of supply with the utmost attention and take particular precautions in this respect.

---

[3] https://www.elia.be/-/media/project/elia/elia-site/company/publication/studies-and-reports/studies/13082019adequacy-and-flexibility-study_en.pdf

[4] https://www.entsoe.eu/outlooks/midterm/

[5] https://economie.fgov.be/sites/default/files/Files/Energy/Mecanisme-remuneration-capacite-Note-E2-02-10-2019.pdf

[6] Cfr footnote 1

Concerning the methodology adaptations requested by CREG awaiting the EU methodology

The CREG lists in paragraph 57 and following the adaptation it wishes to be made for the upcoming adequacy study.

Firstly, it should be noted that these adaptations are greatly based on the comments CREG made on the latest Adequacy Study of Elia. In its note of 02/10/2019[7], FPS Economy has already addressed the concerns raised by the CREG.
The note sets out the analysis and opinion of the FPS Economy on each of the five arguments put forward by the CREG. In formulating its position, FPS Economy has benefited from the expertise of the Federal Planning Bureau, an independent public institute for forecasting, research and analysis of public policies. **Considering that the Belgian state is ultimately responsible for the Security of Supply we consider that FPS Econonomy's position should be adopted in the methodology to apply for adequacy studies awaiting the finalization of the European methodologies**.

Secondly -according to FEBEG- **there is no evidence that the upcoming European methodology for adequacy assessment will consider the elements identified by CREG as mandatory to be included in an adequacy assessment**.

Additionally, FEBEG would like to comment following specific comments on the element put forward by the CREG:

Regarding the implementation of scarcity pricing:
According to FEBEG, scarcity pricing will not provide any structural investment signal and therefore will not trigger any investment required to meet the adequacy standard. At this stage, **the objective and issues to be addressed with the implementation of a scarcity pricing mechanism are not clear**.

On the other hand, if the scarcity pricing aims to further improve market signals for flexible capacity, it should be noted that multiple measures are currently already being implemented to improve such signalling, such as Pay-as-Cleared/Marginal Pricing for balancing products and improved Intraday markets, as well as improving market access for Demand Response.
Additionally, **it is not clear to which extend the scarcity pricing on a tense Belgian network will back-propagate on an interconnected EOM market**. FEBEG considers that a clear analysis should be made how scarcity pricing could impact and shape the Belgian electricity market.
Scarcity pricing is fundamentally about improving short term market signals but does not improve long term markets. It is worth noting that apart from Texas most electricity markets combine scarcity pricing (short term) and CRM (long term). In the very specific case of Texas it is worth noting that **scarcity pricing is not solving the "missing money" issue**. This has been illustrated with the bankruptcy of Panda Temple Power LLC in 2017 with a state of the art new CCGT which started operation in 2014.

Finally, it should also be noted that the study made by Elia (published in 10 December 2018) regarding scarcity pricing raises important concerns on the viability of a scarcity pricing measure in the Belgian context. The lack of a real-time reserve market significantly reduces the impact scarcity pricing can have in a Belgian - and even European - context. As such**, it is highly questionable whether scarcity pricing under current CWE electricity market design can realistically become an effective measure to further enhance the measures already currently under implementation.**

Regarding the modelling of the economic viability of assets in the system:
FEBEG supports the conclusion of FPS Economy published in October 2019 on the CREG study n°1957 referred above.

[7] https://economie.fgov.be/sites/default/files/Files/Energy/Mecanisme-remuneration-capacite-Note-E2-02-10-2019.pdf

Concerning the economic viability of assets, the main conclusion of FPS Economy was that the introduction of an investment model in the adequacy studies is necessary but a complex exercise. This complexity is linked to the numerous elements that will impact the investors' choices but also to the specificities of electricity markets and the lack of perfect foresight impacting investors.

In its study n°1957, CREG refers to the specific year of 2020 for which the revenues of power plants simulated by Elia are much lower that the "real" market revenues based on forwards.

FEBEG would like to underline the following elements:

- Assets' profitability largely depends on the hedging strategies of the various producers (when and with which product). Producers make hedging decisions based on various dimensions, including their analysis of the market, their risk appetite and the expected plant profitability. In this respect, there is no perfect foresight for producers.
- The results of the simulation for the economic viability test also depend on the hypothesis taken in terms of fixed costs and investments costs, which will vary from one power plant to another. For instance, the capex for a major overhaul can significantly vary in function of the plant model. Additionally, its amortization will vary from one company to another

Overall, **one should assess the profitability of an asset over its lifetime, and not just on one or a few years**.

FEBEG therefore supports the approach chosen by Elia for the economic viability test to determine the profitability of capacities – being that the median (P50) inframarginal rent covers the fixed costs for existing ones and fixed and capex costs for new investments.
By contrast using the average consist of integrating the tail of the distribution. This is a well-known issue in the financial literature. In the real world, banks and investors will heavily discount those revenues.

Regarding the "impact of the climate change".
CREG has recently introduced the impact of the climate changes in the frame of adequacy assessment. While this topic is obviously outside of the competences attributed to CREG and although FEBEG has no specific expertise in this complex area, following comments can be made:

Climate changes should be considered over long periods. To that extend it should be noted that 30 years is not an abnormal long period[8]. It should also be noted that as this 30-year period is a sliding window the climate change is duly considered.

Additionally, while there is an unquestionable consensus on global warming the key issue for adequacy is related to extreme situations of cold spell (e.g. polar vortex).

We therefore consider that the **CREG's statements and conclusions are not based on strong evidences**. We welcome the study mandated by the CREG regarding the climate change but also invite the CREG to wait for the conclusion of that study before drawing any conclusions.
FEBEG considers that additional expertise is required in order to assess whether climate change will "reduce the risk of cold spells" as well as what period is to be considered adequate in order to have a correct evaluation of the climate change's impact.
Obviously any changes the climatic years used for the national adequacy assessment should be made by the national authorities, after an objective assessment of a panel of scientists and climate experts.

[8] A NASA article on "What's the Difference Between Weather and Climate" mentions that:
Some scientists define climate as the average weather for a particular region and time period, usually taken over 30-years. It's really an average pattern of weather for a particular region. (we underline)
https://www.nasa.gov/mission_pages/noaa-n/climate/climate_weather.html

Comments on Chapter 6: "Methodology to determine the parameters for the volume to be purchased".

We hereafter re-iterate our main comments made by FEBEG on the draft note (Z)2024 of CREG and consulted upon in November 2019. FEBEG's complete comments are in annex.

Principle 1

In addition to the comments made by FEBEG previously, FEBEG disagrees to a large extent with several elements mentioned by CREG in its note (Z)2024 and in particular with the following statements:

- *« La CREG rappelle que les lignes directrices européennes sur les aides d'État datent de 2014 ».* According to FEBEG, this does not mean they are not relevant anymore. FEBEG notes that CREG does not provide any alternative legislation.
- *« La CREG note que la FEBEG ne fournit pas d'arguments qui sapent le concept de proportionnalité ».* FEBEG referred clearly to the EEAG guidelines and the Clean Energy Package and explained how, on the ground of "proportionality", CREG introduces a fixed budget which makes it impossible to achieve the target level of reliability. However, this is the first part of principle 1 and the first objective of any CRM.
- *« Les arguments de la FEBEG sont centrés en partie sur le caractère innovant de ce concept ».* This is not the case and FEBEG notes that CREG only reacted on a selected number of arguments put forward by FEBEG. In particular, FEBEG insists once again that it is incorrect to consider a CRM only based on costs and not considering the benefits. Those benefits are clearly presented in the Adequacy report of ELIA.
- *« En pratique, cela signifie des critères pour EENS et LoLE. La CREG considère donc que seule l'application du critère LoLE, tel que proposé par la FEBEG, est contraire à la disposition précitée de l'article 25, paragraphe 3.* FEBEG only explained why the proposed approach does not ensure that the LOLE criteria is respected.
- *« La CREG estime que les risques d'un délestage non annoncé en raison d'un problème d'adéquation sont très faibles ».* CREG did not provide any argument for the assertion.

Principle 2

In addition to the comments made by FEBEG previously, FEBEG disagrees with the perfect foresight approach of CREG referring to only one scenario. In addition FEBEG duly notes that CREG acknowledges the costs and risks associated to the CRM : *"Même si le design du CRM devait réussir à faire baisser le prix à zéro au cas où le besoin disparait, ce dont la CREG doute, car il y aura toujours des coûts associés aux obligations et aux risques inhérents au CRM, les contrats CRM à long terme existants entraîneront des coûts inutiles qui devront être supportés par le consommateur ».* According to FEBEG, it should be a key priority of CREG to address those costs and risks to avoid them as much as possible.

Secondly, it is rather paradoxical that on one hand CREG is extremely concerned about the cost of the CRM while on the other hand, if there is no need for capacity as argued by CREG, CREG fully discounts the effect that the result of the auction should be rather low.

Principle 3

In addition to the comments made by FEBEG previously, FEBEG wishes to add following comment.

Regarding the proposition made by CREG to split the volume to contract through the T-4 and T-1 volume, FEBEG takes the opportunity to mention that – contrary to what has been insinuated by CREG in the note (Z)2024 published in December 2019 (paragraph 96) – a large part of the volume to be contracted in the British CRM is done so in the T-4 auction following the DG Comp decision C(2019) 7610. The correct interpretation of the DG Comp decision on the British CRM is that at least 50% of the volume reserved for the T-1 (and not the full volume to be contracted through the CRM) should be contracted in this T-1 auction (for instance, in the case the adequacy concern would have been reduced between the T-4 and T-1 auction).

Principle 4

FEBEG reiterates its comments of the first consultation and, in particular, that the options to build new capacity after the auction T-1 do exist but are rather limited in terms of absolute volumes (e.g. for many types of capacities, a permit is needed for which the procedures last more than 1 year).

DG Comp has also confirmed the need to organize T-4 auctions in the UK capacity market decision on 24/10/2019 (7610) referring to the EEAG Guidelines as basis : "*Some interested parties suggested the elimination of T-4 auctions or the organisation of additional weekly auctions or of T-2 auctions. However,* ***the organisation of T-4 auctions is necessary to ensure compliance with paragraph (226) of the EEAG, i.e. allow sufficient lead time for new investments****. The Commission agrees with the UK's argument (see recital (188)) that the need for T-2 auctions on top of T-4 and T-1 auctions is not justified. Moreover, weekly auctions would not provide the adequate long-term investment signal necessary to reach the CM objectives".*

Principle 5:

FEBEG reiterates its comments of the first consultation. FEBEG wonders how such a principle which according to CREG is "impossible to apply 100%" is useful for the bidders. FEBEG members believe in a competitive process to avoid "over-compensation".

Annex 1:

FEBEG's Comments on CREG's proposed methodology for the volume determination (06/12/2019)

POSITION

Subject: Comments on the public consultation on Methodology for the determination of volumes
Date: 6 December 2019

Contact: Jean-François Waignier
Phone: +32 485 779 202
Mail: Jean-francois.waignier@febeg.be

Please find hereafter the comments of FEBEG on CREG's public consultation on the parameters determining the amount of capacity procured in the capacity mechanism in the frame of the Belgian CRM.

1. Executive summary

The considered approach should guarantee a targeted adequacy, and this at the lowest possible cost

FEBEG is deeply concerned about the interpretation of the CREG regarding the purpose of a CRM.
The implementation of the CRM has as a primary target to ensure a given Security of Supply (SoS). Based on the targeted adequacy criterion - usually expressed in terms of LOLE and EENS - a given capacity volume is to be procured in the market.
It is only when the volume is determined that the secondary target -as described in article 7undecies. § 1- kicks in, meaning that this volume are to be procured at the lowest possible cost for society.
The approach put forward by the CREG is thus not in line with this and creates an important risk for SoS.
The Clean Energy Package is clear that an adequacy criterium expressed through a LOLE target represents an (overall) economic optimum. Deviating from this approach as suggested by CREG would lead to a sub-optimal outcome.

The proposal made by CREG of "proportionality" has no legal basis, nor in the CRM law, nor in the CEP. As mentioned above, CREG seems to suggest that cost comes before adequacy. CREG uses the proposed so-called proportionality target to fix a budget with which SoS can be achieved. This completely contradicts the aim of the CRM law which puts adequacy first and then the cost. The lowest cost will be achieved by setting a fair and open competitive process for all capacity providers, in line with the design features required in the Clean Energy Package.

CREG's proposal for T-4/T-1 volume determination jeopardizes security of supply

With regard to the CREG proposals regarding the volume determination in the T-4 and T-1, FEBEG is seriously concerned about the risks related to this proposal. FEBEG considers it important to further identify and quantify those risks and associated costs which are not yet included.

Firstly, CREG seems to ignore the role of the T-4 and the T-1 auction to ensure that all required volumes are auctioned to guarantee the adequacy of a specific delivery year. If most of the required volumes would only be auctioned in the T-1 auction, there would be no second chance to contract the missing volumes anymore for the upcoming delivery year.

Secondly, CREG also seems to ignore that the purpose of a T-4 auction is also to foster competition between all capacities -including those with a lead time longer than 1 year- in order to drive the cost of the capacity market down.

200 hours

The CRM law foresees that the volume to be reserved in the T-1 auction is at least equal to the capacity that on average has less than 200 operating hours per year in order to cover the total peak capacity. During the debates in the Federal Parliament in preparation of the approval of the CRM law this volume was quantified at about 2 GW. This 2 GW were based on the hourly duration curve of the structural block volume in the central scenario that can be found in the Elia adequacy study on page 116 figure 4.1.

The CREG gives another interpretation to these 200 hours, more in particular the CREG defines these 200 hours as "the number of hours that capacity with a marginal cost equal to the price ceiling in the electricity market is needed to fill the GAP volume."

This definition is not in line with the definition included in the CRM law and moreover results in a volume that is many times higher than the 2 GW namely 6 GW in 2025, 6 GW in 2028 and 8 GW in 2030.

This would mean that Belgium would be exposed to a significant SoS risk if this volume does not get contracted in the T-1 auction. It was certainly not the intention of the legislator to expose Belgium to such a risk. It was merely the intention of the

legislator to ensure that sufficient volume (+ - 2 GW) was left in the T-1 auction in order to offer demand and storage the opportunity to participate in the auction.

In a general way, FEBEG observes that the approach of CREG is contradictory, assuming perfect foresight in some cases while insisting on uncertainty in other cases. Perfect foresight does not reflect the reality faced by FEBEG members.

In conclusion FEBEG believes the current CREG proposal should be fundamentally reviewed to take into additional considerations but also alternative costs or benefits of the different arguments.

FEBEG also wishes to underline that:

- The ERAA and NRAA should be based on the central scenario and methodology as defined in the EU regulation 2019/943 to be worked out by January 5th 2020 by the EntsoE and approved by ACER.
- The LOLE should the basis for the volume determination of the capacity to be contracted.
- "National resource adequacy assessments may take into account additional sensitivities to those referred in point (b) of Article 23(5)" and that the Belgian state could decide to use the HiLo scenario as a sensitivity and/or preferred scenario if deemed necessary.
- Elements such as the remaining LOLE and ENS, as well as the contribution of non-eligible volume should be reflected in the NRAA performed by Elia. The result of the NRAA should therefore be the volume that has to be procured through the CRM auction, from which indeed capacity that has already been contracted can be subtracted.
- The auctions should be organized in such a way that in execution of article 7undecies. § 1, these volumes are procured at the lowest possible cost for society.

2. Comments regarding the principles put forward

Principle 1: "L'introduction d'un mécanisme de rémunération de la capacité permet de respecter les critères de fiabilité, au coût le plus bas possible et à un coût proportionnel"

The introduction of the concept of proportionality by CREG in principle 1 is to our knowledge new in the context of CRM in Europe and is furthermore not an element foreseen in the Belgian CRM law voted in 2019.

The European Environmental and Energy Aid Guidelines (EEAG) contain a specific chapter (3.9.5) on how to assess the proportionality of Aid in the context of generation adequacy. This has been the touchstone for the European Commission during notifications. In this context, the proportionality of a CRM is assessed against two criteria:

- The calculation of the overall amount of aid should result in a reasonable rate of return for beneficiaries, which can be achieved through a competitive bidding process based on clear, transparent and non-discriminatory criteria, effectively targeting the defined objective.
- The measure should not lead to windfall profits, which can be achieved through a design that ensures that the price paid for availability automatically tends to zero when the level of capacity supplied is expected to be adequate

FEBEG notes that the CREG proposal of the proportionality differs significantly from the EEAG, where the EEAG favours correct market functioning, while CREG relies on direct intervention that would interfere with the effectiveness and efficiency of the measure. FEBEG has been clear and supportive from the beginning on the need of a sound and simple CRM design to optimize market functioning and as a result minimize the overall CRM cost.

FEBEG also refers to article 21 (Article 21 General principles for capacity mechanisms) and article 22 (Design principles for capacity mechanisms) of the EU regulation 2019/943 where the concept of proportionality is not mentioned. The targeted adequacy criterion (a loss of load probability of 3h) does already balance costs (to keep or build new capacity) and benefits (i.e. the reduced loss of load probability times VOLL). From that point of view, any additional constraint can only decrease adequacy below the targeted level, and therefore below what society is willing to accept.

By introducing the concept of proportionality, CREG introduces a fixed "budget" constraint. In others words, CREG is defining <u>ex-ante price and quantity in contrast with a system where quantity is defined and a competitive process defines the least cost solution.</u>

FEBEG considers that CREG's approach should be reviewed taking into account the following considerations:

- By applying the "proportionality" requirement, CREG creates an impossible combination of guaranteeing a certain level of adequacy while remaining within a pre-defined budget based on incomplete calculations. CREG points out that in certain cases, this would not be possible as the cost may exceed the predetermined budget. The crucial question on what should prevail in such a case, the desired level of adequacy or the predetermined budget, CREG does not address. However, it is clear from the Clean Energy Package that the state aid clearance is linked to a mechanism that aims at reaching a certain level of adequacy. CREG illustrates its principle with a budget of 100 million € for 12 000 MW leading to a price of 8.3€/kW. Mechanically, there is no guarantee that at such a price, the required 12 000 MW can be found in the market. It can be both too low, as well as too high.

- In order to artificially stretch the budget CREG proposes an 'optimal' point beyond the intersection of supply and demand. It also combines a Pay-as-Bid calculation with a Pay-as-Clear merit order list, while bidding behavior in fact depends on the clearing mechanism making both incompatible. This is the reason why all CRM in Europe use pay-as-clear.

- CREG mentions that *"in order to finance the CRM capacity providers receive a remuneration to be paid by consumers, which increase the surplus of producers and reduce the surplus of consumers"*. Notwithstanding that capacity providers can be consumers through Demand Side Management, it should also be taken into account that in exchange for this capacity payment consumers benefit from (1) adequacy that they would not get without a CRM and (2) lower power prices in the energy market (in contrast to an "energy only market with price spikes).
  Focusing only on the costs and ignoring benefits of the CRM is incorrect. For FEBEG, it is important to keep in mind that, while a CRM generates some costs for society (as strategic reserve does), it also generates benefits and reminds the conclusion of the welfare calculations presented in the Adequacy and flexibility Elia's study for Belgium 2020 – 2030: *A market-wide CRM ensures a robust security of supply and brings market [social] welfare by decreasing wholesale prices which at least compensates for the cost of the mechanism*. Similarly, the Federal Plan Bureau in its 2017 study "Cost benefit analysis of a selection of policy scenarios on an adequate future Belgian power system – Economic insights on different capacity portfolio and import scenarios" stated that investments that diminish the level of net electricity imports will have benefits for both generators and consumers such as a decrease in the wholesale power prices, drop in energy trade deficit and job creation.

The "net social welfare' should therefore be considered for assessing the CRM. Overall FEBEG considers that a CRM is the most appropriate tool to guarantee a given adequacy level at the lowest cost for society.

- CREG argues that a *"CRM can finance existing capacity that would remain in the market anyway leading to windfall profit"*. This argument should be further expanded taking the following considerations into account.
  An existing asset in an Energy Only Market (EOM) would in theory benefit from periods of price spikes in times of scarcity. With the introduction of a CRM, these periods of scarcity and high prices will decrease (in line with the targeted criterion, i.e. 3h per year on average). Therefore, an existing asset will see its "energy revenue" decrease with the introduction of a CRM.
  In the case of a reliability auction with a payback obligation (as it will be the case in Belgium), an existing asset will in addition have to pay back revenue above the strike price - which would not be the case under an EOM.
  Stating that a CRM automatically and in all cases leads to windfalls profits and reduces consumer welfare is therefore biased.
  On the contrary, we argue that existing assets excluded from the CRM would realize windfall losses: past investment expected an inframarginal and scarcity rent, while the latter is replaced by an explicit capacity remuneration from which existing assets cannot benefit it they would be excluded.
  While it is already a strong assumption of CREG arguing that existing assets would remain in the market without capacity remuneration, excluding existing units from a capacity remuneration will lead to discrimination between existing and new assets and will at least distorts investment decisions by increasing risks through regulatory uncertainty. This is also the basis for the choice for a market-wide CRM made in the Belgian CRM law.

- CREG completely neglects the cost in case of under-procurement. The case when too little capacity is procured in Y-4 while there is not enough capacity in Y-1 will lead to additional cost (due to last minute procurement of more expensive capacity) or might even lead to adequacy levels below the expressed target, resulting in additional cost for society. Not including these costs makes the proposal incomplete and one-sided.

- CREG argues that the *"cost of the solution should not be higher than the cost of the problem"*. This principle raises some questions:

  - The "direct cost" of the CRM ("the solution") is easy to compute based on the MW contracted to ensure reliability and the price paid.
    Note that in an EOM design this cost would be replaced by price spikes and reduced adequacy.

- The direct benefit of the CRM, namely an increased adequacy level and lower energy prices (less scarcity prices), is overlooked. CREG does not provide the impact on the energy cost reduction. This element is critical in the overall argumentation since under the discussion on the split between T-4 and T-1, CREG is suggesting that for more than 200 hours power prices should equal market price cap (3.000€/MWh, or even 10.000€/MWh). This would lead mechanically to higher costs for customer in terms of Energy Served. This comment has been made publicly in the CRM taskforce in the FEBEG presentation in October 2019[1].

One should not only assess the direct costs while there is clearly also an indirect costs which will occur in case the adequacy is not guaranteed. FEBEG is concerned that only assessing the cost/benefit aspects from a purely mathematical approach is completely missing the indirect impacts which should be considered as well.

Additionally, FEBEG considers that VOLL in case of announced outage cannot be used for the determination of the cost of the problem as it does not include the enormous costs which would occur in the event of an unannounced outage. The simple assumption that in Belgium capacity shortages will always be announced is not necessarily true. Capacity shortages can also happen unannounced as we have seen during the previous winters, certainly in a tight capacity context without any margins.

FEBEG believes that the proposed principle 1 is not in line with European and national legislation. Moreover, the convoluted additional constraint does not ensure that the level of adequacy is achieved, raising the prospect of creating a CRM that does not actually bring the legally required adequacy.

[1] https://www.elia.be/nl/users-group/implementatie-crm/20191022-tf-crm-7

Principle 2: "La méthodologie permettant de déterminer les paramètres déterminant le volume à acheter dans le mécanisme de capacité doit être en mesure de traiter efficacement les problèmes de fiabilité croissants et décroissants (adequacy concern)."

A CRM should be able to respond to changes in the adequacy concern, but this should be build-in in the overall design and not be tackled inefficiently in response to one specific adequacy study outcome.

First of all, FEBEG would like to qualify the statement of CREG "The study of Elia published in June 2019 shows that adequacy concern decreases both in term of LOLE and EENS (p138)" by adding "in 2 scenarios with only 3 years of results".

- FEBEG disagrees with this deterministic and perfect foresight approach. It is impossible to tell with certainty today what the situation will be in 2025 and in 2030. Hence it is possible that the adequacy concern will decrease in 2028 but there is no certainty about it. For instance, recent development in support mechanisms for renewables in Germany and Flanders raise concern about future RES development. If those RES developments do not take place as planned, the issue of adequacy may not decrease. As a result, the CRM design should be able to respond to fluctuations in the adequacy level, but should not be tailor-made for one specific expectation of future fluctuations.

- The drivers behind this trend are not unique to Belgium and CREG is overlooking how the issue is addressed in other CRMs. FEBEG believes that a market-based CRM can cope easily with this issue. For instance, if adequacy become less of an issue in 2028, the Y-4 auction in 2024 and the Y-1 auction in 2027 would clear at lower price (tending to zero in a situation of significant capacity available) and attract less or no additional capacity at all.

Indeed, one cannot rely on two scenarios and only 3 years of results to state that the issue of adequacy is decreasing with time and use it as a justification for the introduction of additional restrictions that hamper the good functioning of the overall CRM. Additionally, long term contract and short term contracts should be able to compete on equal terms. While an investment threshold is meant as a tool to ensure a level playing field between projects with different cost structures, CREG misuses this parameter to achieve an apparent new target imposed by themselves, namely the avoidance of long-term contracts while these were specifically meant to create a level playing field for capital intensive projects. As recognized in other CRMs and by the European Commission, long-term contracts have a clear value in lowering investment risks (and thus cost to consumers) and attracting new entrants. The restriction of such long-term contracts in response to the belated recognition that adequacy concerns may evolve through time is therefore misguided. FEBEG reminds that

this has already been considered and tackled by the requirement that CRMs, based on competitive auctions, should be able to tend to zero when the level of capacity is expected to be adequate. It is through this mechanism that CRMs will bring the required long-term adequacy at the lowest, overall cost to consumers.

Principle 3: « L'enchère de capacité organisée quatre ans à l'avance (enchère T-4) n'est nécessaire que pour pouvoir attirer une capacité avec un long temps de préparation (plus d'un an) »

FEBEG fundamentally disagrees with this principle. The T-4 auction is required to ensure more competition and industrial planning (not only for new investments, but also for existing capacity). The T-1 auction should be considered as an adjustment auction, coping with the residual uncertainty. A CRM is not only there to attract new capacity when needed, but also to coordinate asset management decisions on existing assets. These decisions can be taken more efficiently and at lower cost when there is some guidance provided on the capacity need several years ahead.
FEBEG already raised this point in its presentation during the CRM taskforce in October 2019.

In general, the reflections made by CREG on the benefits and drawbacks of the two different time-horizons is very one-sided in favour of the T-1 auction:

- For some principles, CREG seems to rely on perfect foresight and for some other principles CREG postulates uncertainty. The comments around uncertainty are inconsistent with previous statements of CREG on LOLE and EENS (e.g. *« les inquiétudes concernant la fiabilité de la Belgique, exprimées en LoLE et EENS, diminuent (considérablement) », « Cela signifie que les LoLE et EENS réels seront plus bas » VERSUS « la décision quant au volume à acheter repose sur une étude qui doit être réalisée 5 ans à l'avance. Cela signifie que beaucoup d'incertitude subsiste quant à la capacité disponible en Belgique et à l'étranger, à l'évolution des prix et à l'évolution de la demande, etc »*). For FEBEG uncertainty is a key feature and can only be addressed via different scenarios.
- The CREG seems to ignore the purpose of a T-4 auction, namely to foster competition between all capacities- including those with a lead time longer than 1 year- to drive the cost of the capacity market down. CREG also ignores the fact that the T-4 auction provides a preliminary view on which capacity can already be relied upon. A 'second chance' to further calibrations is given in the T-1 auction. If most of the required volumes would only be auctioned in the T-1 auction, there would be no second change to contract the missing volumes anymore for the upcoming delivery year. This to the contrary in case of the use of the full potential of the T-4 and T-1 auction. "Prevention is better than cure."

- 'Over-estimation' in the T-4 auction is unlikely, as a significant volume will anyhow be kept for the T-1 auction. Moreover, an important share of demand for the T-4 auction is fostering competition between various capacity providers – new vs existing, generation vs storage vs demand response.
- On the difficulty during the T-4 auction for the participation of Demand Response, it is worth pointing out that a volume will anyhow be reserved for the T-1 auction in order that such capacity has a fair chance of participation.
- Regarding the argument on market concentration, the European Commission explicitly mentions the T-4 auction as lowering the barrier for new entrants by providing better visibility. CREG is referring to the Polish case as a counter example where the largest player has provided the largest share of capacity. It is a key duty of the regulator to make the mechanism as competitive as possible by, amongst others, facilitating market entry. In addition, competition in the Belgian CRM is not only between producers but also include DSM and foreign capacity. Any complex rules, compliance cost and regulatory uncertainty will inevitably hamper market entry and competition.
- There is no guarantee that existing capacity in 2021 will still be there 3 years later, unless contracted through the CRM in the T-4 auction.
- FEBEG emphasizes that important benefits of the T-4 auction such as improved visibility and precautionary planning for the TSO and capacity owners are missing in the CREG argumentation. The T-4 auction creates stability and predictability which is beneficial while uncertainty increases costs.
- CREG argues that *« En outre, lors d'une enchère T-4, suivie d'une enchère T-1, le risque existe que les principaux acteurs du marché adopteront un comportement stratégique afin de créer une pénurie de capacité »*. For FEBEG this argument is highly speculative and any evidence of such strategic behaviour in any CRM is missing. In a well-designed CRM open to competition, a player should have all interest to offer its capacity in a competitive manner in T-4. Not offering in T-4 does not create any guarantee to be retained in T-1. Secondly assuming that a player could withhold existing capacity in T-4 to make sure that a new built project would be retained in T-4 is highly speculative and totally underestimating competition. Finally, the CREG as regulator has sufficient powers to tackle inappropriate market behaviours.

It is worth noting that the T-4 and T-1 auctions should not be considered conflicting or mutually exclusive, but rather complementary and each with their respective strengths. An interesting example is the UK CRM, where the bulk of the contracted volumes is procured in the T-4 auction and around 5% of the capacity is kept for the T-1 auction as a residual, adjustment auction. The amount kept in the T-1 auction is based on a confidence interval for the situation of the corresponding delivery year, not on an arbitrary split. FEBEG invites CREG to look carefully at international experience on this topic.

Country	Capacity reserved for T-1 auction
UK	95% confidence interval around T-4 (i.e. around 5% of T-4 auction volume)
IE	2-5% of capacity requirement
PL	1.160MW out of ca. 22.000MW (i.e. approximately 5% of main auction)
IT	At least 1% of expected capacity demand

CREG proposal for the amount to be reserves in the T-1 auction is not in line with the CRM law

CREG states *« Elia a publié les résultats pour 2025 et 2028 dans son étude. Ils sont repris ci-dessous. D'après les résultats de la simulation d'Elia, au moins 6 GW devront être réservés pour l'enchère T-1 pour une livraison entre 2025 et 2026 »*.
FEBEG will rely on ELIA to confirm this interpretation or not.

The graph on p.15 of the consultation is a partial reproduction of the graph made by ELIA in its report (reproduced below). The CRM law explicitly mentions that "If the average number of hours is lower than or equal to 200, this block is auctioned in T-1". CREG instead proposes: "The average number of hours needed to meet the reliability standards should be calculated as the hours that capacity with a marginal cost equal to the market price cap is needed to fill the gap".

The rationale behind CREG's reasoning is unclear. It is also unclear what the impact of such a gap fulfilled at market price cap would be: does this means that for 200 hours market prices would reach the price cap (3000€/MWh or even 10.000€/MWh) ? In our view this would have a significant cost in the energy market and seriously harm societal welfare.

FEBEG would also like to refer to the intention of the law, and more specifically the justification put forward for the amendment introducing the reservation of volumes representing capacity with running hours below 200. The justification explicitly refers to a CREG presentation based on Elia data, stating that the construction of new production capacity for such low running hours may be economically inefficient. During the debates in preparation of the approval of the CRM law this volume was quantified at about 2 GW. This 2 GW were based on the hourly duration curve of the structural block volume in the central scenario that can be found in the Elia adequacy study on page 116 figure 4.1. It is clear that the CRM law foresees that the volume to be reserved in the T-1 auction is at least equal to the capacity that on average has less than 200 operating hours per year and makes no reference to the "market price cap" that CREG refers to.

STRUCTURAL BLOCK VOLUME IN THE CENTRAL SCENARIO WITH ASSOCIATED HOURS DURING WHICH A CERTAIN CAPACITY IS NEEDED [FIGURE 4.1]

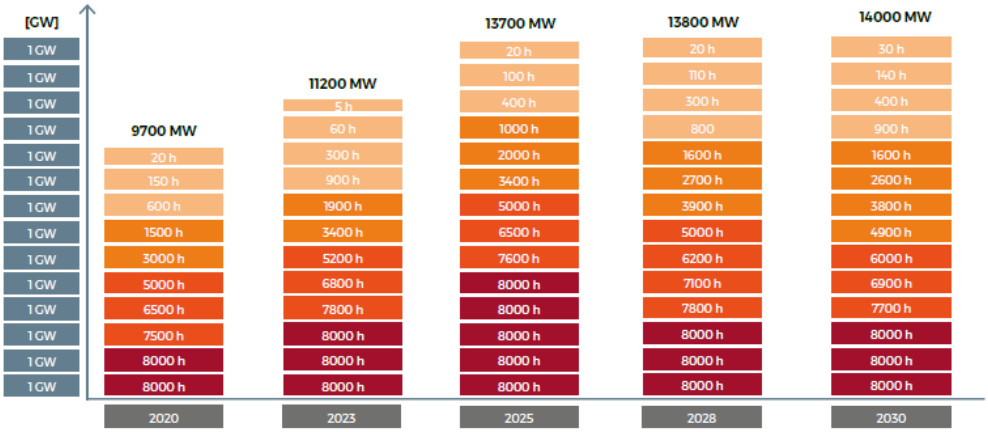

EXPLANATION OF THE EVOLUTION:

The 'structural block' increases towards 2025. This is linked with the nuclear phase-out calendar. As the 'CENTRAL' scenario assumes a third of the nuclear fleet is unavailable, the nuclear phase-out amounts to a delta of 4 GW between 2020 and 2025.

After 2025, the 'structural block' volume increases slighty, which is linked to a moderate increase of the consumption in the 'CENTRAL' scenario (linked to electrification) compensated by the addition of renewable capacity in Belgium.

The amount of hours during which a certain volume of capacity is needed is slightly decreasing from 2025. This is linked to the increase in renewable capacity and is mainly driven by wind additions.

In 2030, there still is a need for around 6 GW 'baseload' capacity (>6000 h) in Belgium. Such capacity could be provided by several means (including imports) which will depend on the capacity mix that will be installed in Belgium and in neighbouring countries. Depending on the time horizon, there is around 2 GW needed for around 200 hours a year.

FEBEG therefore considers that this new interpretation of CREG raises questions, is unlike any other CRM implemented in Europe and is not in line with the intention of the lawmaker.

FOR 2025 [FIGURE 4-43]

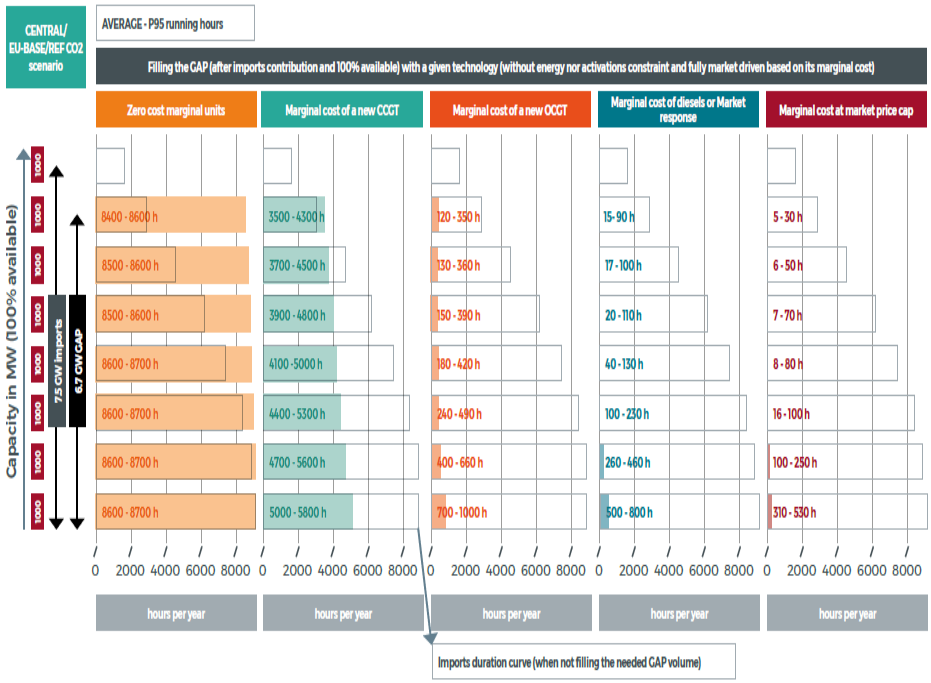

Not all new capacity can be delivered in one year.

Finally, CREG insists that a lot of capacity can be built in less than one year. FEBEG agrees and is familiar with the different technologies mentioned, which can have a role in a balanced and sound energy-mix.

However, FEBEG has strong reservations that the replacement of 6 GW of baseload capacity (which historically produced 50% of electricity consumption in Belgium) by gas engine, batteries and small cogeneration is economically sound from consumer and societal perspective.

These are all low investment cost projects, but high short run marginal cost projects. Demand response and batteries for instance both have a much lower contribution to security of supply than larger projects. Furthermore, demand response and gas engines have a much higher short run marginal cost, which again would have an upward effect on energy prices. This upward effect also has a negative effect on consumers. FEBEG would welcome additional clarifications on the impact on the energy market for consumers.

In addition, FEBEG highlights that small gas engines have in general a size of 5 MW meaning that in order to replace a unit of 1.000 MW, 200 engines with associated land and connections are needed. Again, this seems highly theoretical and not realistic from an industrial perspective.

In any case, if this would be economically optimal, this should be the outcome of a technology-neutral, competitive auction.

Principle 4: « en raison de la neutralité technologique, la mise aux enchères de capacité ne peut pas être discriminante entre différentes technologies »

FEBEG fully supports technology neutrality. For FEBEG it is not only a sound principle but a European obligation (Article 22, Regulation 2019/943).

FEBEG would welcome some additional explanation on how this principle will be applied in practice. For example, CREG explicitly mentions in paragraph 57 a selection of technologies with lead-times below a year as a reason for limiting the ability to obtain long-term contracts. Is CREG therefore expressing a preference for these technologies over other technologies?

Principle 5: « Le CRM ne peut pas conduire à une sur-subvention de la capacité »

CREG states that the CRM should not lead to a compensation above the missing money. While FEBEG agrees with the principle, the following considerations should be taken into account: the CRM should not lead to a compensation below the missing money neither, eventually resulting in full-scale regulation of capacity prices and losing the advantages of a strong competition.

More fundamentally, FEBEG considers it as challenge to evaluate the assessment of missing money of the market parties. For FEBEG this is mainly due to uncertainty making it impossible to estimate ex-ante or even ex-post "the" missing money as it is also based on market participant's assessment of risks and opportunities in the market.

The report of ELIA (graph below p 161) illustrates the uncertainty faced by a potential investor in Belgium. It shows that under different scenarios the infra marginal rent varies significantly.

INFRAMARGINAL RENT FOR THE MOST EFFICIENT CCGT INSTALLED IN THE SYSTEM IN BELGIUM FOR 2025, 2028 AND 2030 - EU-BASE IN 'EFFICIENT GAS' AND 'PEAKERS' SENSITIVITIES [FIGURE 4-44]

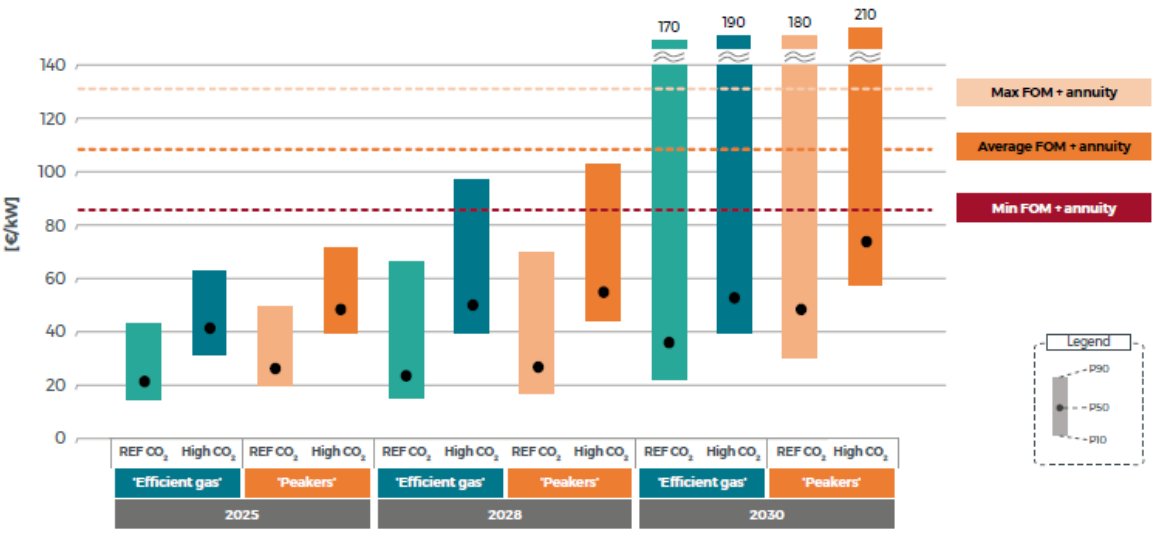

For instance in 2028 the inframarginal rent can be below 20€/kW or above 100€/kW. Logically, this means that the ex-ante assessment of the missing money by an investor can vary significantly. When participating to the CRM auction, each market player will need to make a decision on its assumption with respect to missing money.

Considering this range, let's assume that three players with exactly the same asset have different expectations:

- Player A: expects an infra-marginal rent of 20€/KW
- Player B: expects an infra-marginal rent of 60€/KW
- Player C: expects an infra-marginal rent of 100€/KW

Ceteris Paribus, player A has the highest missing money, player C the lowest (if any), and player B is in between. For the sake of the discussion, let's assume all players are needed in the CRM and let's only consider 2028. In 2028 the realized infra-marginal rent is 50€/KW. This means:

- Player A has been too conservative when assessing its missing money
- Player B has "slightly" underestimated its missing money
- Player C has significantly underestimated its missing money

Regardless of the pricing rules (pay-as bid VS pay as clear) market participants have offered their capacity in good faith based on their missing money and based on their expectations of the energy market.
Player A is making a profit, player B & C are making a loss. Would player A be "over-subsidized" under the CRM and player C "under-subsidized"?

Under a competitive process competition will ensure that players do not get "over-subsidised" if being too conservative in their estimation of the missing money. It could be for instance that Player A has not been selected in the CRM auction in the first place, as his expectation of missing money was the highest and therefore his bid was the least competitive. Hence this principle is redundant in a CRM that complies with the EEAG, i.e. based on a competitive auction. FEBEG moreover does not see how to comply with such a principle and how CREG could enforce such a principle ex-ante and ex-post.
Finally, FEBEG appreciates that CREG refers to EU regulation 2019/943 (50) with respect to overcompensation
"Capacity mechanisms (underlined by CREG) should not result in overcompensation, while at the same time they should ensure security of supply. In that regard, capacity mechanisms other than strategic reserves should be constructed to ensure that the price paid for availability automatically tends to zero (underlined by FEBEG) when the level of capacity which would be profitable on the energy market in the absence of a capacity mechanism is expected to be adequate to meet the level of capacity demanded."

FEBEG take this opportunity to ask how CREG considers this element of the regulation when advocating for pay-as-bid later in the document which is not compatible with a price tending to zero.

3. Comments on chapter 5 proposal to improve the determination of parameters for the volume to buy

3.1 Scenario choice (5.1)

CREG should align to the objectives of Regulation 2019/943 when using the NRAA and ERAA for determining the capacity volume to be procured.

The NRAA and ERAA as defined in the Regulation 2019/943 aim to objectively map adequacy concerns in countries. To achieve this, the NRAA and ERAA have to use a central reference scenario with a number of variations reflecting the different likelihood of the occurrence of resource adequacy concerns. To determine the capacity volume to be procured, CREG should use the scenario selected by the Belgian authorities, which –in the frame of the strategic reserve– currently is "the HiLo scenario" considering the high dependency of Belgium on its interconnections.
. The proposal of the CREG to use the 'scenario with least cost = No Regret' should therefore be rejected. Furthermore this latter doesn't seem to be a scenario to model a future situation (based on varying input parameters), but rather is a choice based on the output of the modelling.
For FEBEG, the outcome will not fit the CRM objective but risks to determine the procurement of a volume that seriously underestimates the actual or most likely adequacy concern which Belgium may face. The statement that in the T-1 auction only 'One scenario' is available, is also not in line with Regulation 2019/943.

3.2 Determination of volume for the delivery year

CREG should further detail the methodology to calculate the auction volume in respect of the principles set out in Regulation 2019/943 Articles 23 & 24 on the ERAA and NRAA

The representation by CREG of the calculation of the Total Auction Volume is a serious oversimplification of the actual modelling that has to be performed and which should reflect the uncertainties inherent in such probabilistic modelling. Elements such as the remaining LOLE and ENS, as well as the contribution of non-eligible volume should be reflected in the NRAA performed by Elia. The result of the NRAA should therefore be the volume that has to be procured through the CRM auction, from which indeed capacity that has already been contracted can be subtracted.

Reference is made to article 24[2] sub 1 in which "National resource adequacy assessments may take into account additional sensitivities to those referred in point (b) of Article 23(5)"

---

[2] *Art. 24 National resource adequacy assessments*
1. National resource adequacy assessments shall have a regional scope and shall be based on the methodology referred in Article 23(3) in particular in points (b) to (m) of Article 23(5).
National resource adequacy assessments shall contain the reference central scenarios as referred to in point (b) of Article 23(5).
National resource adequacy assessments may take into account additional sensitivities to those referred in point (b) of Article 23(5). In such cases, national resource adequacy assessments may:
(a) make assumptions taking into account the particularities of national electricity demand and supply;
(b)use tools and consistent recent data that are complementary to those used by the ENTSO for Electricity for the European resource adequacy assessment.
In addition, the national resource adequacy assessments, in assessing the contribution of capacity providers located in another Member State to the security of supply of the bidding zones that they cover, shall use the methodology as provided for in point (a) of Article 26(11).

3.3 Price cap multi-year contracts (5.5.7)

As mentioned in FEBEG's answer to the ELIA's design notes consultation, FEBEG considers that the introduction of a price cap is not suitable for the following reasons:

- The price caps is complex and isn't justified in a "pay as bid" auction.
- Inframarginal CRM rents does not create windfall profit.
- A CRM does not generate more revenues than needed to attract or keep a given level of generation capacity.
  - The competitive bid of an existing unit in the CRM (with a pay-as-bid clearing mechanism) corresponds to the amount needed on top of the expected (risk adjusted) inframarginal rent in short term energy markets to cover fixed annual O&M costs:
  - Earnings above the Short-Run Marginal Cost are an integral part of the electricity market functioning and under no capacity or energy market model labelled as windfall profits but as the so called infra-marginal rents, which is necessary to cover costs which are not included in the SRMC.
- The introduction of an intermediate price cap is costly and an inefficient measure to address possible market power abuse. Rendering markets more contestable is a more efficient measure to ensure competitive behaviour.

We refer to section 3 of our contribution (20191011 CRM Design notes 1 - Intermediate price cap Position FEBEG) for more details.

We therefore consider that multi-year price caps should be avoided as it will hamper the creation of a well-functioning market with abundant competition.

Annex 2:

FEBEG vision on investment:

Reaction to Elia Adequacy study and CREG analysis of Elia Adequacy study

FEBEG vision on investment

Reaction to Elia Adequacy study and CREG analysis of Elia Adequacy study

17.09.2019

Febeg

FEBEG members

Aspiravi – DRIVEN BY WIND, TOGETHER
axpo
belpower – drivenbynature
C-Power
EDF Belgium
EDF luminus
Electrabel
electrawinds – POWERED BY NATURE
élicio
Eneco
Enel – L'ÉNERGIE À VOTRE ÉCOUTE.
eni
eni trading & shipping
e·on Benelux
essent.be
ENGIE
GASSCO
gasNatural fenosa
LABORELEC
OCTA+
parkwind
PRIMA LNG
TOTAL – GAS & POWER BELGIUM
T POWER
VLAAMS ENERGIE BEDRIJF
WE POWER – wind energy power
WINGAS

Febeg

Key Observations

1. Investments in new capacity in the electricity market are extremely capital intensive and subject to long payback periods. From a utility perspective, investors therefore need a solid business case. Expectations around revenues from the energy markets are build on numerous scenarios with the common threat that the more uncertain or infrequent price levels are, the more heavily they are discounted.

2. For FEBEG members, it is not realistic that any investment would be approved on the existence of unreliable price spikes more than 5 and even up to 20 years into the future. FEBEG therefore considers the median to better approximate the way investors assess the financial viability of assets in the business plans, compared to the average.

3. Modelling of market fundamentals and scenario analysis are important tools to assess the financial viability of assets. Also in the literature, the importance of risk in investments in the electricity sector is indicated as an important factor and obstacle for the development of new assets.

4. Actors on the electricity market are generally risk averse, with both suppliers and consumers preferring to limit their exposure to short-term markets through hedging on forward markets. As a result, it is unrealistic to expect consumers being willing to pay price spikes of up to 10.000 EUR/MWh on a structural basis. Therefore, generators can also not depend on such prices.

1. Economic assessment of investments

Given the costs and time-horizons involved in the development of new assets in electricity markets, investment decisions are complex and taken with extreme care. They are usually relying on a broad range of models, scenarios and criteria. However, a common thread in economic and financial valuation is that the more uncertain a revenue is, the more heavily it is discounted in any assessment of future revenues

- The development of new assets in electricity markets require large upfront costs and cover long payback periods (>20 years) beyond the liquidity horizon of forward markets, which is < 3 years). Investors clearly need a solid business case to approve such a financial commitment.
- The standard industry practice is to consider a set of market scenarios and to evaluate the distribution of revenues and costs over the economic lifetime of the asset considered (e.g. CCGT covers approximately 20-25 years). Such an analysis aims to compute a distribution of expected gross margins over this lifetime. Depending on whether these margins are covering the fixed and investment costs, a new investment can be approved.
- Integral parts of such an analysis are
  - (i) Expected prices and revenues on the electricity markets, based on market fundamental;
  - (ii) the likely consequences of policy decisions (e.g. the energy transition); and
  - (iii) the impact of the market design.

  Such analysis also includes the possibility of price spikes. However, given the uncertainty and infrequency of such price spikes, they are heavily discounted in any such assessment.
- For Febeg members it is not realistic that any investment would be approved on the existence of unreliable price spikes more than 5 into the future.
- It is well known that the median is less sensitive to extreme prices, which are unpredictable and cannot be effectively captured. FEBEG therefore considers the median to better approximate the way investors assess the financial viability of assets in the business plans, compared to the average.

Febeg

2. Economic Assessment of investments: modelling (1)

- In a long term prices modelling tool, electricity prices are formed based on market fundamentals and implies by definition the following principles:
  - market is at equilibrium (market agents are rational and take decisions rationally);
  - all market players have the same information (no market distortion);
  - assets bid on the market based on their marginal variable cost (no permanent mark-up strategies).

Extensive system description & Hypothesis

Centralized generation fleet
Max capacity, efficiency, maintenance rates & seasonality
forced outage rates and duration

Interconnection capacities
Current NTC's + likely projects

Decentralized generation
Installed capacity for Wind & PV
Generated energy by Run of River, CHPs, Biomass …

Commodity prices
Coherent oil/gas/coal assumptions
Seasonal gas price profile
CO2

Demand
Yearly demand per zone
Entsoe hourly patterns
Temperature elasticity

Hydro reservoirs:
Zone equivalent storage
& max production capacity

Climatic series

- **Wind speed**
- **Rainfalls**
- **Sun radiation**
- **Temperatures**

Data processing

Model ready data

- **Random outage series for each centralized units**
- **Centralized units**
- **Variable cost is calculated for each unit**
- **demand profiles per zone**
- **Production profiles for decentralized thermal generation (biomass, CHP…)**
- **Interconnection commercial capacities**
- **PV production series per zone**
- **Wind production series per zone**
- **Run of River production series per zone**
- **inflows patterns to reservoirs**

Febeg

2. Economic Assessment of investments: modelling (2)

Generation and commercial flows

Hourly Generation pattern for each plant type

Hourly Commercial flows between zones

Hydro reservoir profiles

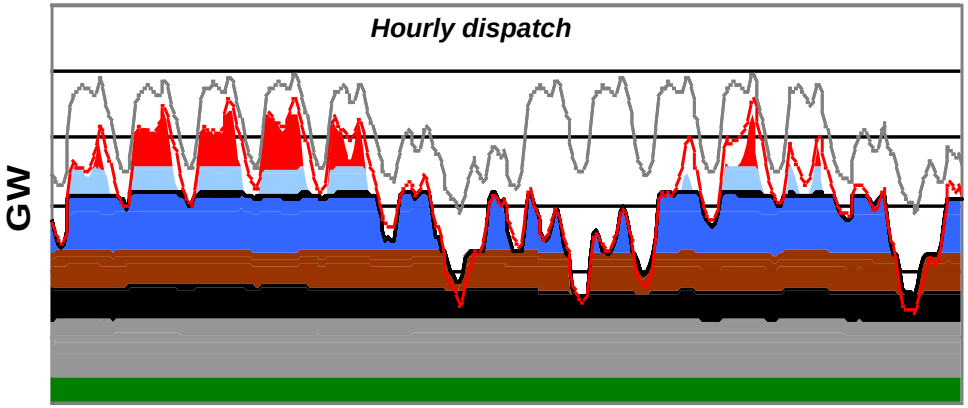

Market price and plant margins

Hourly market prices

Plants' gross margins

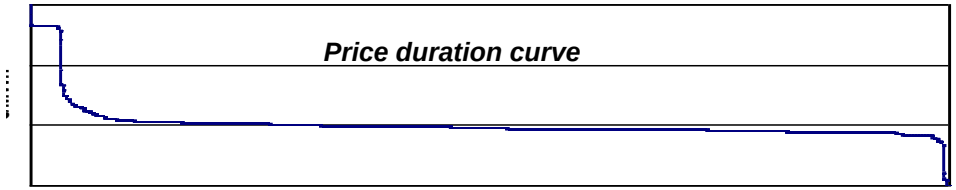

The Elia methodology for the viability check should be assessed based how it manages to approximate to the market behaviour and the market approach for taking investment decisions; its merits don't depend on a comparison with forward prices.

3. Economic Assessment of investment: literature (1)

The need for a solid business case for capital-intensive investments that are necessary in the electricity market is also highlighted in the literature. Such solidity cannot be found in the risky tail ends of electricity markets more than 5 years in the future.

"As a result of their durability, generation investments are exposed to a variety of risks. This includes innovation reducing the cost of competing technologies, changes to future fuel prices, carbon prices and also those to energy policy—such as wholesale price caps, carbon price floors, or RES subsidies that collapse wholesale prices. "

"Higher levels of RES have revealed the "missing money" problems of the current market design for conventional plant need to provide reserves and flexibility services. Given the current extent of both "missing money" and "missing markets", the least-cost option for procuring such plant as the system becomes tight is a capacity auction (following on from Principles 3 and 6).While reliant on government judgment of the type and amount of capacity to be procured, this uses competitive market forces to determine the price of such capacity (to be paid to generators available to provide it during stress hours)."

Market design for a high-renewables European electricity system (https://www.eprg.group.cam.ac.uk/wp-content/uploads/2017/06/1711-Text.pdf)

"The power sector evolved from an almost risk-free environment in the days of regulation (except for the prudence reviews in the United States) to one of extreme uncertainty today. The following sketches the situation faced by European investors in generation capacity. We identify two types of risk that we characterize as exogenous and regulatory. Fuel price risk comes from worldwide movements and can be seen as the paradigm of exogenous risks. Uncertainties due to the implementation of the EU-ETS illustrate regulatory risks. They are generated by the institutional process and are thus endogenous. We emphasize again the illustrative character of the discussion and our focus on methodology: a company will consider more scenarios (e.g., on penetration of renewables) than what is discussed here."

"We also observe that risk aversion distorts investments towards less capital-intensive equipment, whether in energy-only or capacity markets. This effect combines with the shortage of capacity induced by a low cap in an energy- only market to result in a dramatic impact on the bill to the final consumer. The simple policy conclusion is that although energy-only and capacity markets can be argued to be similar when looked at in a deterministic framework, they can significantly differ as soon as risk and risk aversion are taken on board."

Generation Capacity Expansion in a Risky Environment: A Stochastic Equilibrium Analysis, in Operations Research

3. Economic Assessment of investments: literature (2)

The need for a solid business case for capital-intensive investments that are necessary in the electricity market is also highlighted in the literature. Such solidity cannot be found in the risky tail ends of electricity markets more than 5 years in the future.

"The importance of risk in investment pervades corporate finance since the early days of Management Science. Valuations of risky assets can roughly be classified in two major approaches. One is based on the so-called Capital Asset Pricing Model (CAPM) and is mainly used for long-term investment. The other is based on contingency pricing and the literature of derivative pricing: it is commonly applied for hedging short and medium-term operations"

"Risk functions implicitly embed a risk premium: each agent discounts the expected value of the payoff by an endogenous premium that depends on its risk aversion and the risk pattern of its payoff. As with risk neutrality, prices are now defined in the different states of the world and are endogenous to the system."

Investment with incomplete markets for risk: The need for long-term contracts, in Energy Policy

Risk is today overwhelming both in the global economy in general and in the gas and power sectors in particular. It is commonly acknowledged that risk has a devastating effect on investment. This note is motivated by this situation: it reports analysis conducted with the view of improving our understanding of the phenomena underpinning Newbery and Stiglitz's example by quantifying the impact of risk-trading instruments.

Summing up, the important message is that risk has an obvious detrimental impact on investment and achieving short-term efficiency is pointless if this cannot be transferred to long-term efficiency. It is an important component of energy security and can also jeopardize the energy equity by preventing investments and driving up the cost of the transition to more environmentally sustainable sources."

What Models Tell us about Long-term Contracts in Times of the Energy Transition, in Economics of Energy and Environmental Policy

4. Economic Assessment of Investments: Forward Markets

Actors on both sides of the electricity market are generally risk averse, as indicated by their willingness to buy or sell in advance. Consumers wish to protect themselves against high prices, while generators wish to protect themselves against low prices.

- As highlighted by CREG (§1.2, 2/8), hedging is a standard approach in the energy sector and consists in selling/buying volumes at an agreed price before delivery by making use of the "forward markets".
  - Hedging strategies are applied by all generators and consumers/suppliers to mitigate their risk exposure to short-term markets. This provides certainty on the revenues for the sellers (generators) and on the costs for buyers (consumers/suppliers).
  - The only way for a seller to make a transaction is to have a buyer on the other side. The reasoning is therefore symmetric: both counterparties are no longer exposed to the short-term markets.
  - The Clean Energy Package states that there should not be a maximum limit on the wholesale electricity prices (Art.10§1). However, FEBEG believes that it is clear that no consumers would in reality be willing to have unlimited exposure to short-term prices (at levels of 3.000/10.000 EUR/MWh and even above). As a result, it is therefore unrealistic that generators can structurally depend on capturing and valorising price spikes to base investment decisions upon.
- This illustrates that forward markets are principally a risk mitigation market, implemented to the benefit of both sellers as buyers.
  - Forward market, though also sensitive to fundamentals, reflect different risk aversion of the different market players and include a behavioural component that can not be objectivized
  - Forward markets do not reflect the impact of rare and unpredictable events on short-term markets, and only partially random events of tense situations (as they are only one possible outcome of multiple scenarios reflected in the forward prices, with the more extreme ones more heavily discounted). As a result of limited visibility of short-term events in the future, they also cover a limited time horizon, up to 3 years in advance.
  - Forward markets and their prices are therefore an insufficient tool for investors to base decisions regarding the financial viability of assets upon.

Annex

Additional comments from FEBEG regarding the CREG analysis of the Elia Adequacy and Flexibility study

Key Observations on other topics of CREG analysis

A. A strategic reserve would not attract new investments in generation/storage/demand response and would therefore not solve the long-term structural issues faced by Belgium, especially given the nuclear and coal phase-outs across Central-Western Europe. As one of the results, the cost of complementing the energy only market with a strategic reserve as suggested by CREG can quickly escalate beyond the cost of a market-wide capacity market.

B. The extent to which Belgian consumers could rely on foreign capacity is limited by the availability of this capacity during (regional) stress events, not the availability of interconnectors between Belgium and the neighboring countries

C. Using capacity reserved for balancing purposes to meet peak load would violate the obligation of Elia to ensure the safe operation of its grid at all times and could endanger the electricity system, as recently demonstrated in the UK.

A. Costs

The cost of complementing the energy market with a strategic reserve as suggested by CREG can quickly escalate beyond the cost of a market-wide capacity market.

- CREG implies that an Energy-Only Market with a Strategic Reserve is a more efficient market design.
- However, the total cost to society can quickly escalate and go beyond the cost of a market-wide capacity market:
  - According to the analysis around 5-7 hours of scarcity can be expected on average. In that case, electricity prices are allowed to rise to 3.000 EUR/MWh or even beyond to 10.000 EUR/MWh
  - This means that the implied cost through the energy market – besides the cost of operating the SR – for the consumers ranges from 200 to 950 million EUR for a peak load of 13.500 MW*
  - All the while, this cost does not guarantee security of supply towards Belgian consumers
- This compares to an estimated cost of 350** million EUR for a market-wide capacity market where the reliability standard chosen by the authorities is ensured.

- This back-of-the-envelope calculation is better developed by Elia in their Adequacy and Flexibility Study, coming to a similar conclusion:
  - *"From a system perspective, the 'EM+CRM' cases have a net market welfare gain between 150 and 250 M€ per year compared to the 'EOM+SR' case. This is calculated as the yearly market welfare gain (consumers and producers sur- plus and congestion rents) minus yearly fixed costs (including investment costs in new and refurbished capacity) for each case. "* (Adequacy and Flexibility Study for Belgium 2020-2030, Elia, page 165).

*: 200 MEUR = ~ 3.000 EUR/MWh * 5h * 13.500 MW; 950 MEUR = ~ 10.000 EUR/MWh * 7h * 13.500 MW

** PWC estimate as base case, March 2018

B. Contribution of Foreign Capacity

The extent to which Belgian consumers could rely on foreign capacity is limited by the availability of this capacity during (regional) stress events, not the availability of interconnectors between Belgium and the neighboring countries

- According to ENTSO-E (Mid-Term Adequacy Forecast 2018, Section 2.3):
  - *(…) On the other hand, 'critical or extreme situations' can occur which are highly correlated in time and geographical perimeter (e.g. cold spell, heat waves, large rain-snow storms, etc.). In those situations, a lack of available power might occur inside a geographical area encompassing more than one country. We refer to these as simultaneous scarcity situations in a certain macro-area.*
  - *Lack of power in these situations is typically related to the lack of available resources to generate the needed power in the specific macro-area. Typically in those cases, although the adequacy problems are not linked to a lack of interconnection capacity, the affected countries (part of the macro-area) might present import levels lower than their maximum simultaneous importable capacity. Such low levels of imports are, rather, related to a global/regional deficit of available power generation inside the perimeter encompassed by the countries in scarcity.*
  - *(…) In conclusion, interconnectors contribution is of key importance in periods of scarcity. In case of single country scarcity, it is expected that the country in scarcity will import close to its maximum simultaneous importable capacity. In case of several countries' simultaneous scarcity, more moderate imports might thus occur despite sufficient interconnection capacity being available, due to lack of power resources within the scarcity area. However, still high imports should be expected towards the simultaneous scarcity (macro-) area*

- The energy policies of our neighboring countries, driven a.o. by the decarbonization targets and by nuclear phase-out, will lead to a reduction of available firm capacity in the market (see e.g. the low-carbon sensitivity in MAF 2018).

C. Use of Balancing Capacity

CREG proposes that the capacity reserved for balancing purposes be counted upon to meet peak load. This would violate the obligation of Elia to ensure the safe operation of its grid at all times and could endanger the electricity system, as recently demonstrated in the UK.

- In its analysis, CREG proposes to include capacity reserved for balancing purposes in the capacity that should be available to meet peak load. In its view, balancing capacity should be activated before load is shedded in a controlled 'brown-out'.
- However, balancing capacity is a crucial tool for Elia to safeguard the electricity grid by ensuring a balance between generation and consumption. Without balancing capacity available, a single incident can lead to a national or even pan-European 'black-out'.

  For this reason, European network codes prescribe strict requirements for TSOs to meet balancing capacity requirements at all times. The Systems Operations Guidelines specifically quotes the load-frequency control as a critical tool: *"One of the most critical processes in ensuring operational security with a high level of reliability and quality is the load-frequency control ('LFC'). Effective LFC can be made possible only if there is an obligation for the TSOs and the reserve connecting DSOs to cooperate for the operation of the interconnected transmission systems as one entity and for providers' power generating modules and providers' demand facilities to meet the relevant minimum technical requirements." (SOGL, preamble 12)*

- On 9/08/2019, GB experienced a partial blackout* affecting more than a million people. One of the underlying causes was balancing capacity insufficient to cope with (almost simultaneous) forced outages of generation capacity at distribution and transmission level. Such incidents show the risks associated with a lack of balancing capacity, as would result from CREG proposal to divert balancing capacity towards adequacy purposes.

* Technically speaking, the situation is a '*Low Frequency Demand Disconnection*'

Annex 3:

FEBEG Note – CRM design provides exit signal for existing power plants

POSITION

Subject: CRM design provides exit signal for existing power plants
Date: 27 March 2020

Contact: Jean-François Waignier
Phone: +32 485 779 202
Mail: Jean-francois.waignier@febeg.be

CRM DESIGN PROVIDES EXIT SIGNAL FOR EXISTING POWER PLANTS

Capacities requiring non-recurrent investment costs below the investment threshold for a 3-year contract are excluded from participation in the capacity remuneration mechanism

PROBLEM STATEMENT

The proposals for investment thresholds and the proposal for the calibration of the intermediate price cap are not coherent and consistent. **The combination of the current proposals leads to the exclusion of capacities requiring non-recurrent investment costs not meeting the investment threshold for a 3-year contract from participation in the Belgian capacity remuneration mechanism.**

The exclusion of such investment costs is problematic in the sense that the Belgian capacity remuneration mechanism risks to:

- be **in breach with the principles of non-discrimination** and technology-neutrality while the mechanism should be market-wide allowing new and existing capacities to compete on level playing field;
- **increase costs for society** as relatively moderate investments in lifetime extension or refurbischment of existing power plants are excluded.

The proposals for investment thresholds and the proposals for the calibration of the intermediate price cap should be made coherent and consistent to avoid that capacities requiring non-recurrent investment costs not meeting the investment threshold for a 3-year contract are excluded from participation to the Belgian capacity remuneration mechanism.

ELIGIBLE COSTS

The CREG[1] has proposed – in article 3 of the draft Royal Decree – the basic rules for the determination of the costs that are eligible to meet the proposed investment thresholds. The detailed rules are still to be defined in guidelines that will be developed by CREG meaning that – at this stage – there's **still uncertainty on the cost eligibility while there's already a concrete proposal for investment thresholds.**

According to article 3, §1 of the draft Royal Decree prepared by CREG only initial and non-recurrent investment costs are eligible to meet the thresholds. According to CREG recurrent costs are not eligible and CREG considers a major overhaul as a recurrent cost.

The proposal of CREG is ignoring day-to-day practice. In reality, existing power plants – in function of the remaining operating hours on the counter – will at some moment in time be obliged to make an investment in order to continue the safe operation of the power plant that – without this investment decision – will be forced to close down. That investment includes the investment in an overhaul or lifetime extension in combination with, depending on the circumstances and the results of the inspections, investments in upgrades, a conversion, replacement of parts, instalment of a new gas turbine, … Such investment will increase the number of operating hours of the existing power plant, often in combination with an increase of the installed capacity, the efficiency or the flexibility.

It will be a **very difficult exercise to split such investment costs between a cost related to a 'major overhaul', a cost related to a 'lifetime extension' and a cost related to a 'capacity increase' let alone to make the distinction between a 'recurrent' and a 'non-recurrent' investment cost**. In order to avoid too complex and detailed rules as well as ample discussions on interpretation issues, **all 'capitalized investments' should be considered as eligible investment costs**. This is a simple criterion that allows for an easy and objective verification in the accounts.

The detailed rules for the eligibility of investment costs should be clarified as soon as possible, by preference in the Royal Decree in order to provide certainty. Without these detailed rules it is difficult to assess the investment thresholds. All capitalized investments should be considered as eligible costs as this allows an easy and objective verification in the accounts.

INVESTMENT THRESHOLD

The Belgian Electricity Law[2] foresees capacity categories with different contract durations to allow larger investments to compete on a level playing field with existing capacities.

The CREG[3] has set – in article 6 of the draft Royal Decree – the threshold for a 3-year contract at 177 EUR/kW. The Federal Public Services and PwC[4] recommend to set the threshold at 124 EUR/kW (option 1) or 94 EUR/kW (option 2).

Taking into account the proposal of CREG on the eligibility of investment costs, all capacities requiring initial and non-recurrent investment costs below the threshold for a 3-year contract would not be able to benefit from a longer contract duration. **As part of the investment cost in a lifetime extension or**

---

[1] '*Proposal of Royal Decree for the determination of the investment thresholds and eligibility criteria in order to classify the capacities in capacity categories*', CREG, (C)1907, 12 December, 2019.

[2] Article 2, 84°, 'Law regarding the organization of the electricity market', 29 April 1999.

[3] '*Proposal of Royal Decree for the determination of the investment thresholds and eligibility criteria in order to classify the capacities in capacity categories*', CREG, (C)1907, 12 December, 2019.

[4] '*Observations with regard to the public consultation of CREG*', FPS and PWC, 19 November 2019

refurbishment will be considered – as explained above – as a recurrent investment cost and is thus considered as non-eligible, most investments in lifetime extension or refurbishment of existing power plants will not be able to benefit from a 3-year contract.

All capacities requiring initial and non-recurrent investment costs below the threshold for a 3-year contract cannot benefit from a longer contract duration: in practice, most investments in lifetime extension or refurbishment of existing power plants will not be able to benefit from a 3-year contract.

INTERMEDIATE PRICE CAP

As capacities requiring non-recurrent investment costs below the threshold for a 3-year contract cannot benefit from a longer contract duration, the only way to recover those investment costs is through winning one or several 1-year contracts in the capacity auctions. **The uncertainty of the ability to win consecutive 1-year contracts creates uncertainty on the cost recovery of those investments.**

Theoretically there are three options to deal with the non-recurrent investment costs below the threshold for a 3-year contract:

- the non-recurrent investment costs are not annualized and are as such taken into account in the calculation of the missing money for the bid so that the capacity provider is sure to recover his investment costs when selected in the capacity auction;
- the non-recurrent investment costs are annualized for the calculation of the missing money, but the capacity provider adds a mark-up to manage his risk of not being able to win consecutive 1-year contracts in the capacity auction ;
- the non-recurrent investment costs are annualized for the calculation of the missing money and the capacity provider takes the risk of not being able to recover his costs if he would not win consecutive 1-year contracts in the capacity auction.

In this context, it is important to point out that the Belgian Electricity Law[5] foresees the possibility to implement a price cap. Elia[6] proposes – in article 9 of the draft Royal Decree – to implement an intermediate price cap for 1-year contracts.

The intermediate price cap is foreseen to be equal to the missing money of the technology with the highest missing money (i.e. 'worst performer'). In order to calculate this missing money, Elia takes into account the 'annualized recurrent investments costs, including major overhauls', 'annual fixed operational and maintenance costs' and 'variable operational and maintenance costs'.

The calibration of the intermediate price cap only takes into account 'annualized recurrent investment costs' and not 'initial and non-recurrent investment costs below the threshold for a 3-year contract': annualized initial and non-recurrent investments costs below the threshold for a 3-year contract are not taken into account, let alone non-annualized or annualized with a mark-up investment costs below the threshold. **This means that the intermediate price doesn't leave any room for existing power plants with non-recurrent investments costs below the threshold for a 3-year contract to bid in their missing money.**

---

[5] *A*rticle 2, 79°, 'Law regarding the organization of the electricity market', 29 April 1999.

[6] '*Proposal of Royal Decree for the determination of the methodology for the capacity calculation and the parameters for the auctions related to the capacity remuneration mechanism'*, Elia, 22 November 2019.

Even worse, depending on the exact calibration of the intermediate price cap – estimation of recurrent investment costs (major overhaul), modelling of market revenues, etc.– **some older, less performing, existing power plants even risk not to be able to recover the costs of a major overhaul through their bid for a one year contract forcing them to close down the power plant**.

The intermediate price cap doesn't leave room for existing power plants with non-recurrent investment costs below the threshold for a 3-year contract to bid in their missing money. Depending on the calibration of the intermediate price cap some existing power plants risk not to be able to recover the costs of a major overhaul through their bid for a one year contract forcing them to close down the power plant.

CONCLUSION

Existing power plants with non-recurrent investment costs below the threshold for a 3-year contract, i.e. most lifetime extensions and refurbishments, cannot benefit from a longer contract duration.

The intermediate price cap doesn't leave any room for existing power plants with non-recurrent investment costs below the threshold of a 3-year contract to bid in their missing money.

The calibration of the intermediate price cap even risks to endanger the cost recovery of a major overhaul forcing existing power plants to close down.

Existing power plants considering investments in major overhauls, lifetime extensions or refurbishments risk not to be able to fairly and on a level playing field basis compete in the capacity remuneration mechanism: they will be pushed out of the market and replaced by new – more expensive – capacities increasing the overall cost for society. Therefore, the proposals for the investment threshold and the intermediate price cap need to be modified in order to make them consistent and ensure a fair competition for existing power plants.